INSTALLATION INSTRUCTIONS

DZR 25/84 B

EZR/DZR - installation in ventilation duct

- The diagram shows a typical installation situation for EZR/DZR duct fans. The fans are integrated into the ducting using flexible couplings.
- Recommended distance to the next element is a minimum of 3 - 5 x the duct diameter.
- If the cross-section narrows: small duct diameter < 0.75 x large duct diameter, angle of inclination 6-8°.

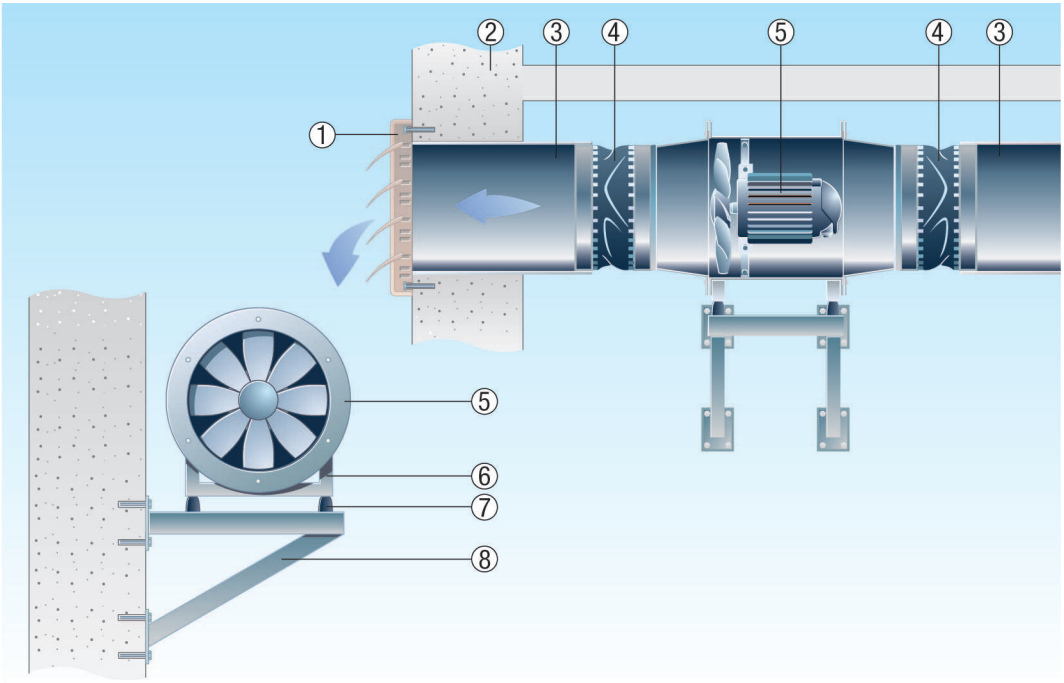

① External shutter, airstream operated
② Outside wall
③ Ventilation duct, to be supplied by the customer
④ Flexible coupling
⑤ Fan
⑥ Mounting feet
⑦ Vibration damper
⑧ Bracket, to be supplied by the customer