WIRING DIAGRAM

FL 30 P

ERH... electric air heater with LW 9 air flow monitor and ST speed controller

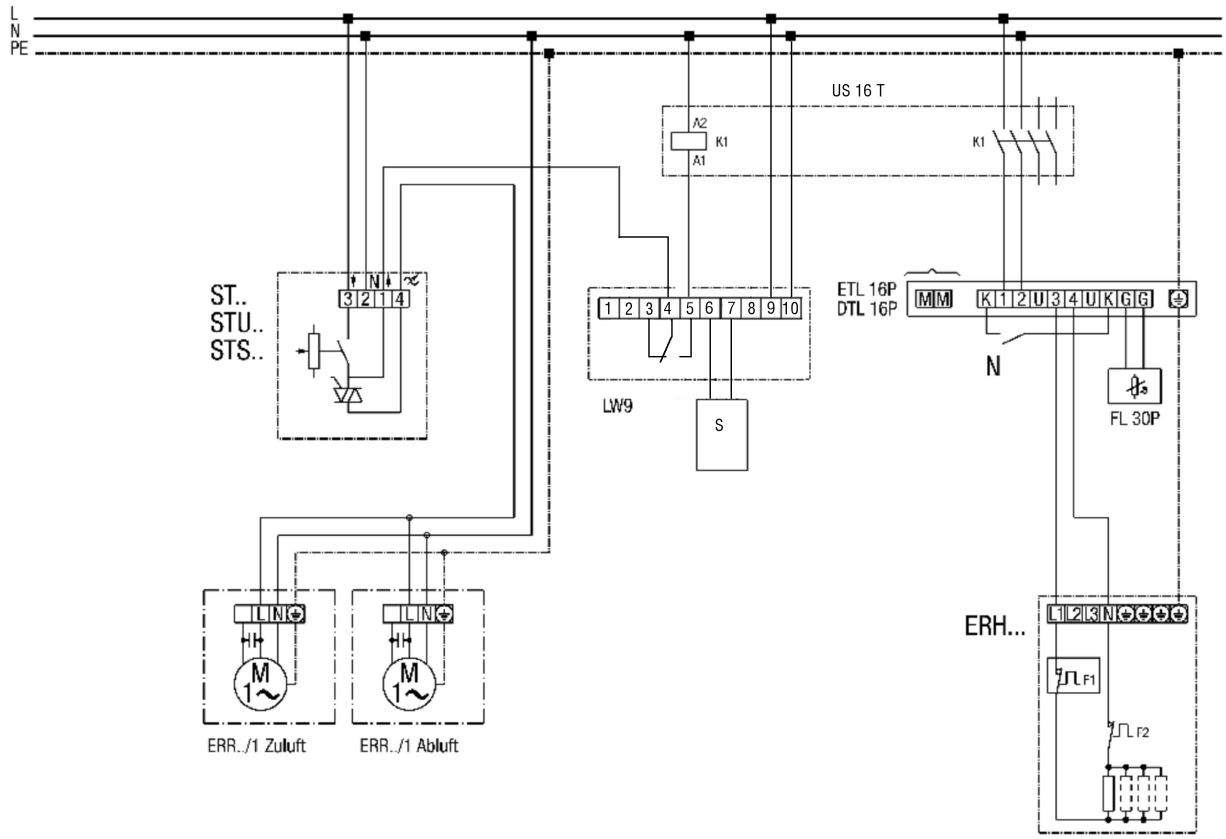

K1 - heating release (US16T)
ERR .. / 1 - centrifugal fan
LW 9 - air flow monitor
ETL 16 P - electronic temperature controller
DTL 16 P - electronic temperature controller
FL 30P channel sensor
ST.. STU.., STS.. speed controller
ERH - electric air heater
F1 - temperature limiter
F2 - safety temperature limiter
N - night reduction
① Only with DTL 16 P