ET 20

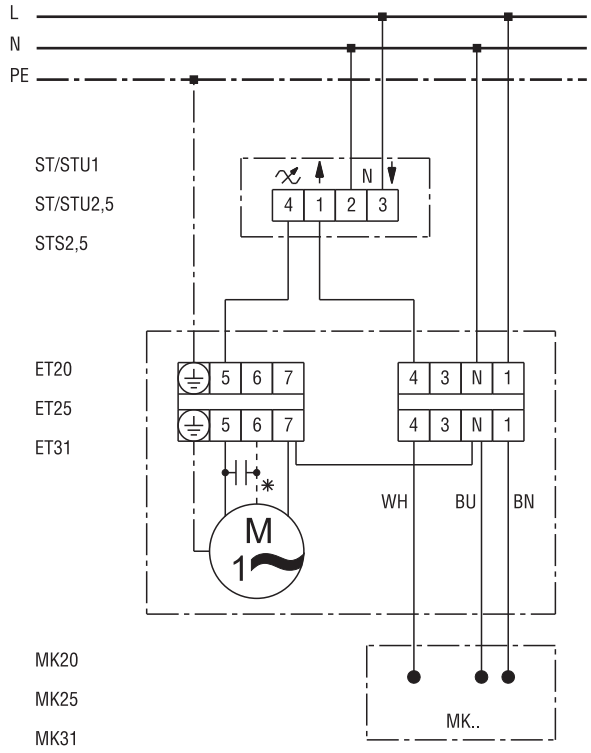
L
N
PE
ST/STU1
ST/STU2,5
STS2,5
N
4
1
2
3
ET20
ET25
ET31
5
6
7
4
3
N
1
WH
BU
BN
M
1
MK20
MK25
MK31
MK..

ET 20

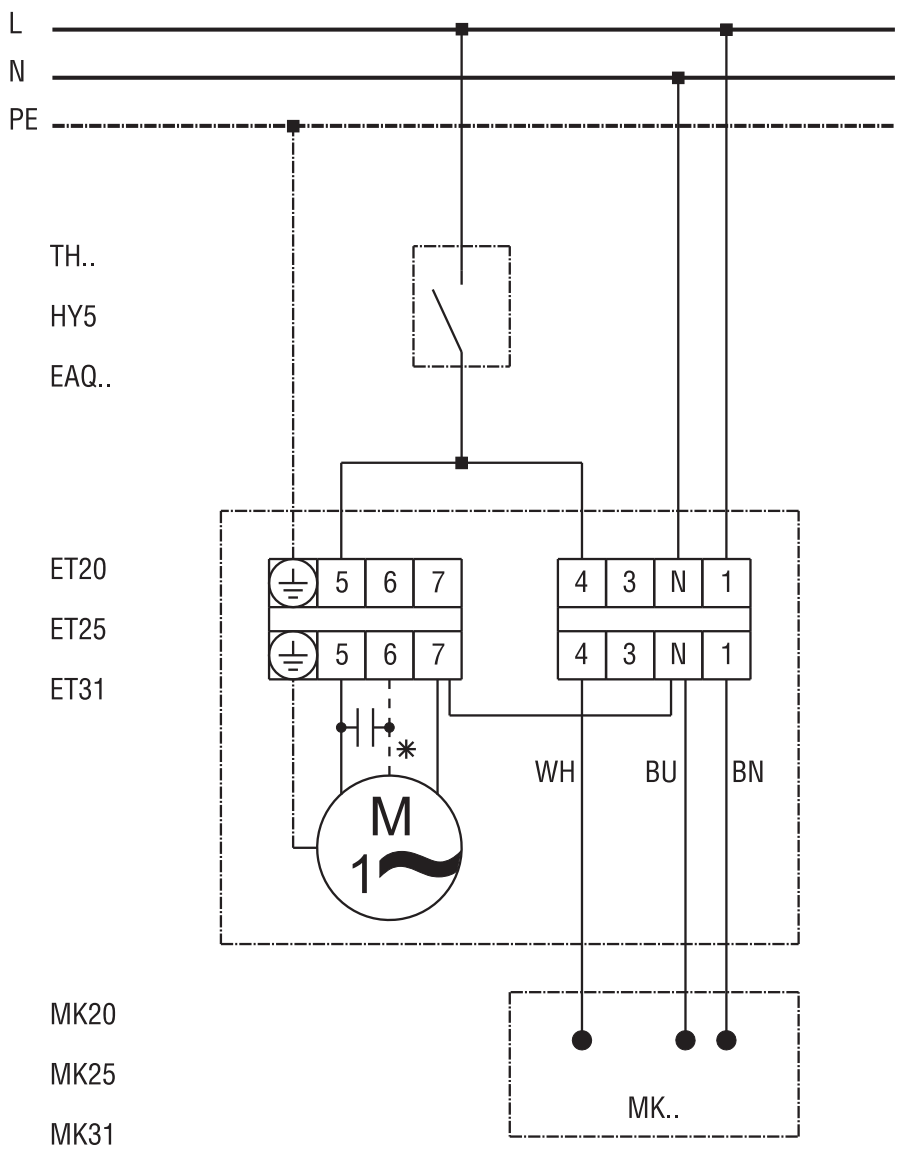
L
N
PE
TH..
HY5
EAQ..
ET20
ET25
ET31
5
6
7
4
3
N
1
WH
BU
BN
M
1
MK20
MK25
MK31
MK..